VISION-EASE LENS
WORLDWIDE

PRODUCT REFERENCE GUIDE

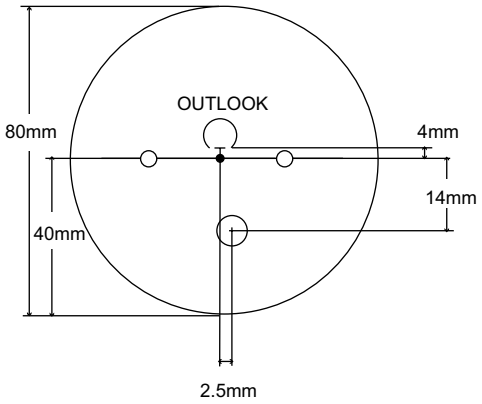

Base Curve Selection

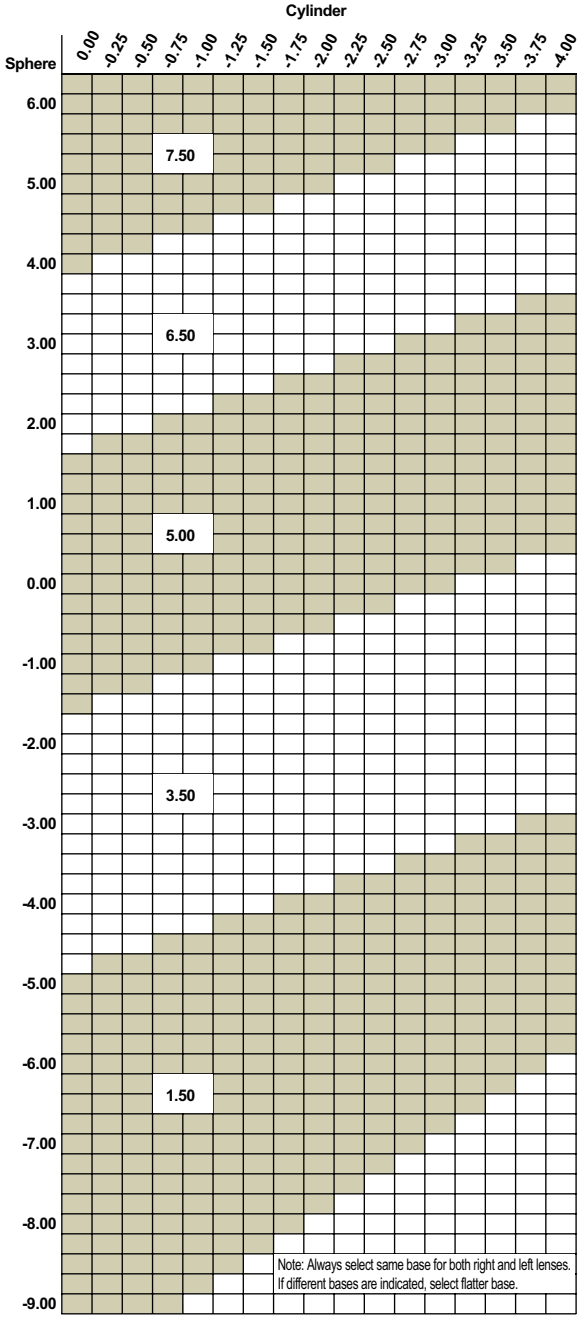

Polycarbonate

Outlook® Aspheric Progressive Addition Lenses

80mm Progressive (Clear)

Base Curve	True Curve (1.530)	Front Radius	50mm SAG*	Back Curve	Back Radius	CT (mm) Nominal	ET (mm) Nominal		MRP Location
1.50	1.59	333.333	0.939	-6.25	-84.800	8.5	15.5	4.0 A	0.0 In
3.50	3.38	156.805	2.006	-6.25	-84.800	9.6	13.5	4.0 A	0.0 In
5.00	4.94	107.287	2.953	-6.25	-84.800	8.1	9.5	4.0 A	0.0 In
6.50	6.44	82.298	3.889	-6.25	-84.800	10.9	9.5	4.0 A	0.0 In
7.50	7.59	69.829	4.629	-7.50	-70.667	11.0	9.5	4.0 A	0.0 In

Base Curve	Clear
1.50	+0.75 to +3.50
3.50	+0.75 to +3.50
5.00	+0.75 to +3.50
6.50	+0.75 to +3.50
7.50	+0.75 to +3.50

*Utilized for power calculation only, not for thickness calculation.

Click Here for Technical Tips

VISION-EASE LENS
WORLDWIDE

PRODUCT REFERENCE GUIDE

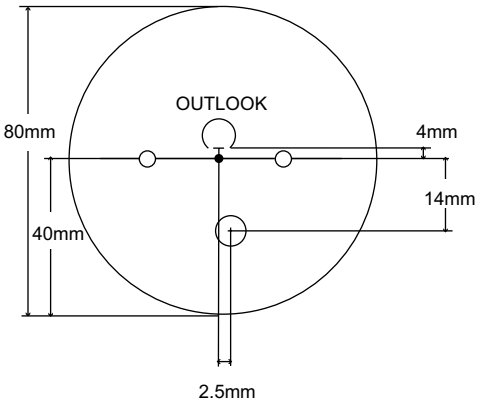

Base Curve Selection

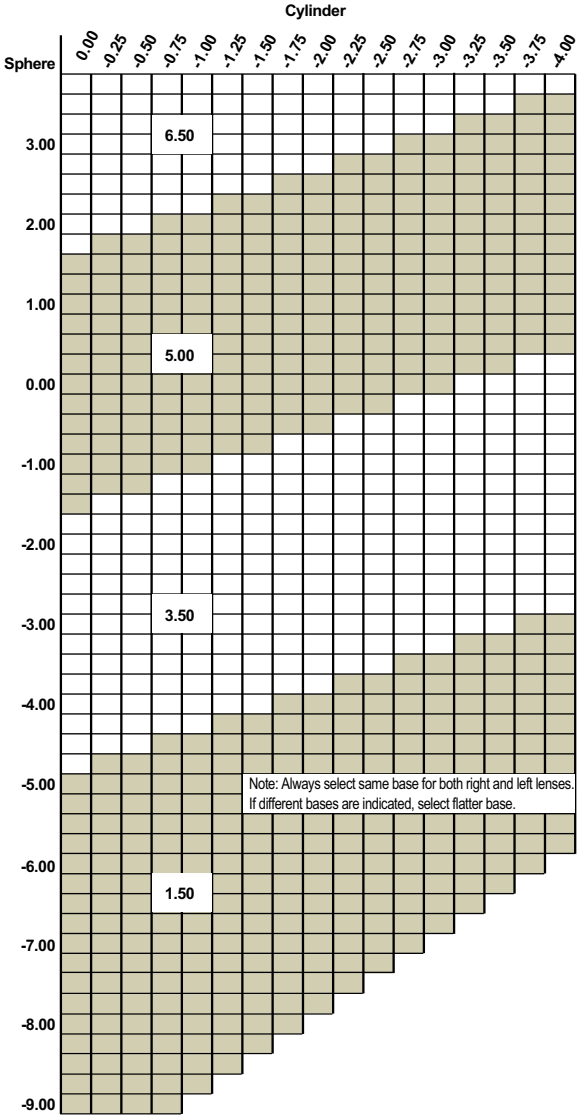

Polycarbonate

Outlook® LifeRx® Light-Responsive Progressive Addition Lenses

80mm Progressive (Gray, Brown)

Base Curve	True Curve (1.530)	Front Radius	50mm SAG*	Back Curve	Back Radius	CT (mm) Nominal	ET (mm) Nominal	MRP Location	
1.50	1.61	329.193	0.951	-6.25	-84.800	8.5	15.5	4.0 A	0.0 In
3.50	3.38	156.805	2.006	-6.25	-84.800	9.6	13.5	4.0 A	0.0 In
5.00	4.95	107.071	2.959	-6.25	-84.800	9.1	10.5	4.0 A	0.0 In
6.50	6.44	82.298	3.889	-6.25	-84.800	10.9	9.5	4.0 A	0.0 In
7.50	7.59	69.829	4.629	-7.50	-70.667	11.0	9.5	4.0 A	0.0 In

Base Curve	Gray	Brown
1.50	+0.75 to +3.50	+0.75 to +3.50
3.50	+0.75 to +3.50	+0.75 to +3.50
5.00	+0.75 to +3.50	+0.75 to +3.50
6.50	+0.75 to +3.50	+0.75 to +3.50
7.50	+0.75 to +3.50	+0.75 to +3.50

*Utilized for power calculation only, not for thickness calculation.

Click Here for Technical Tips

VISION-EASE LENS
WORLDWIDE

PRODUCT REFERENCE GUIDE

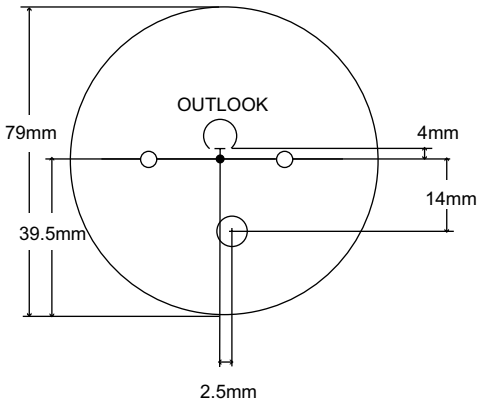

Base Curve Selection

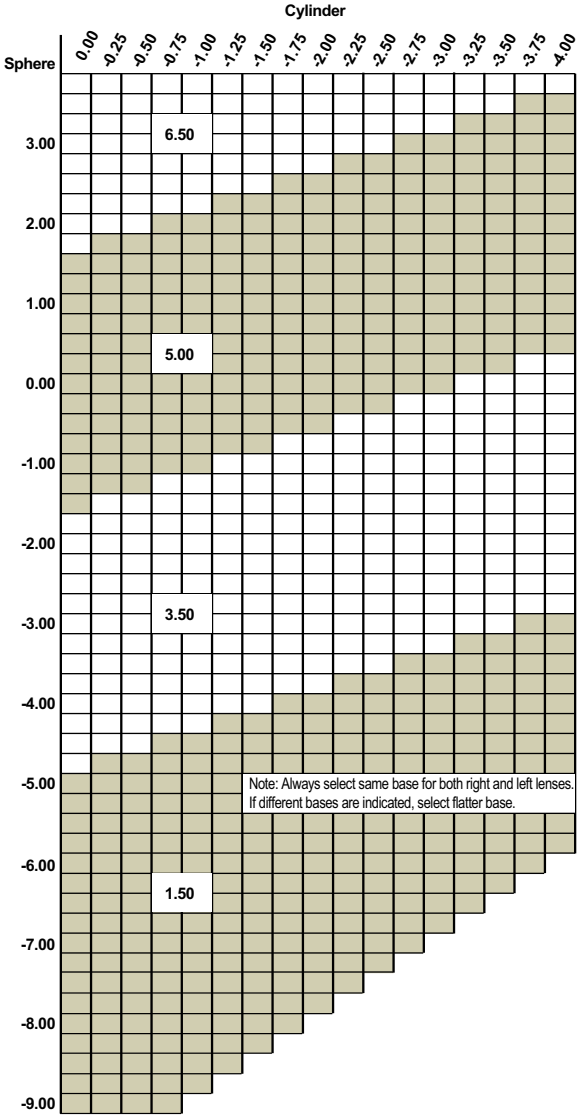

Polycarbonate

Outlook® SunRx® Polarized Aspheric Progressive Addition Lenses

80mm Polarized Progressive (Gray, Brown)

Base Curve	True Curve (1.530)	Front Radius	50mm SAG*	Back Curve	Back Radius	CT (mm) Nominal	ET (mm) Nominal	MRP Location	
1.50	1.59	333.333	0.939	-6.25	-84.800	8.5	15.5	4.0 A	0.0 In
3.50	3.42	154.871	2.030	-6.25	-84.800	9.7	13.5	4.0 A	0.0 In
5.00	4.95	107.071	2.960	- 6.25	-84.800	8.0	9.5	4.0 A	0.0 In
6.50	6.44	82.298	3.889	- 6.25	-84.800	10.5	10.1	4.0 A	0.0 In

Base Curve	Gray	Brown
1.50	+1.00 to +3.00	+1.00 to +3.00
3.50	+1.00 to +3.00	+1.00 to +3.00
5.00	+1.00 to +3.00	+1.00 to +3.00
6.50	+1.00 to +3.00	+1.00 to +3.00

*Utilized for power calculation only, not for thickness calculation.

Click Here for Technical Tips