VISION-EASE LENS
WORLDWIDE

PRODUCT REFERENCE GUIDE

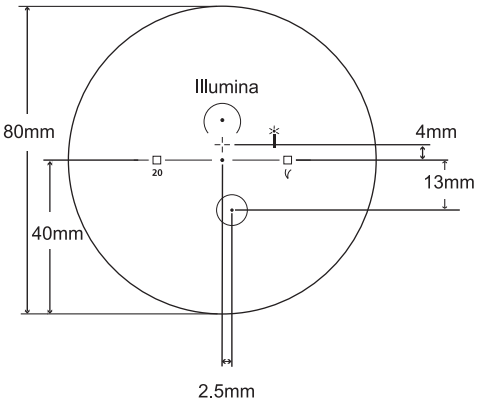

Base Curve Selection

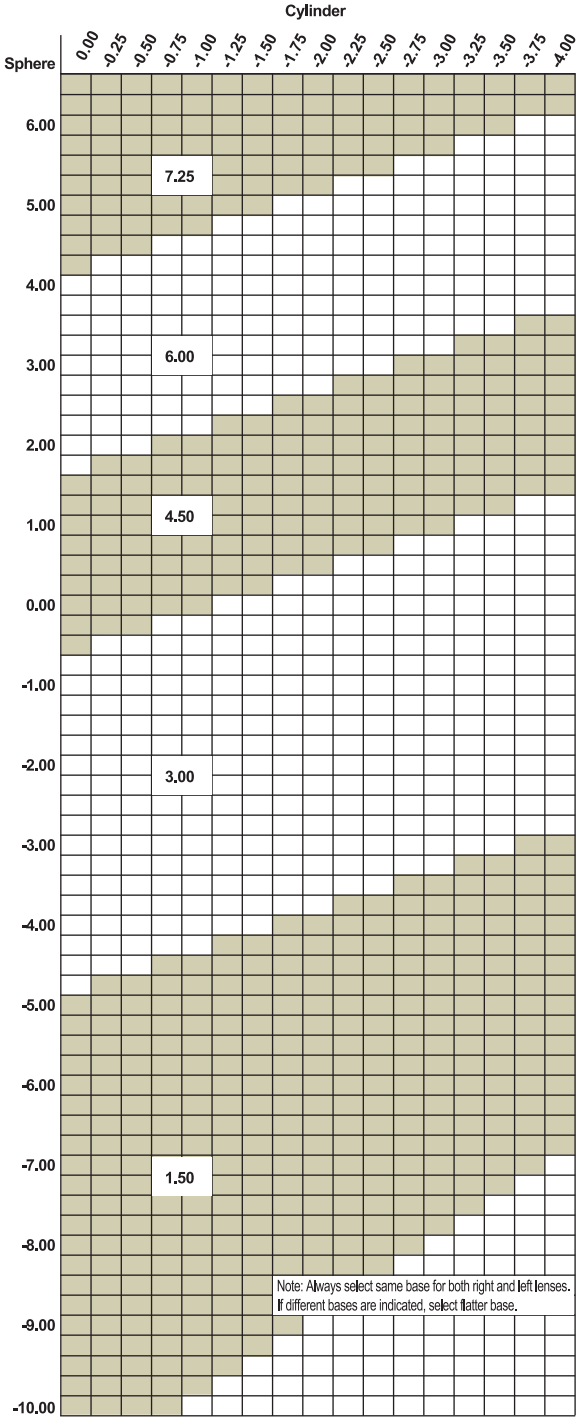

Polycarbonate

Illumina® Tegra® Aspheric Progressive Addition Lenses

80mm Progressive (Clear)

Base Curve	True Curve (1.530)	Front Radius	50mm SAG*	Back Curve	Back Radius	CT (mm) Nominal	ET (mm) Nominal	MRP Location	
1.50	1.61	329.192	0.945	-6.25	-84.800	8.7	15.5	4.0 A	0.0 In
3.00	3.00	176.666	1.778	-6.25	-84.800	8.6	13.0	4.0 A	0.0 In
4.50	4.50	117.777	2.684	-4.53	-116.997	10.7	9.5	4.0 A	0.0 In
6.00	6.00	88.333	3.612	-6.25	-84.800	9.7	9.0	4.0 A	0.0 In
7.25	7.25	73.103	4.408	-7.50	-70.667	9.8	9.5	4.0 A	0.0 In

Base Curve	Clear
1.50	+0.75 to +3.50
3.00	+0.75 to +3.50
4.50	+0.75 to +3.50
6.00	+0.75 to +3.50
7.25	+0.75 to +3.50

*Utilized for power calculation only, not for thickness calculation.

Click Here for Technical Tips

VISION-EASE LENS
WORLDWIDE

PRODUCT REFERENCE GUIDE

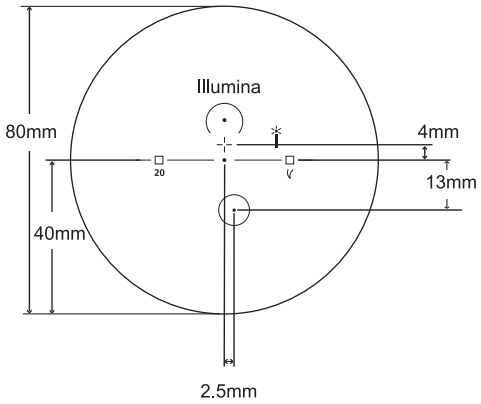

Base Curve Selection

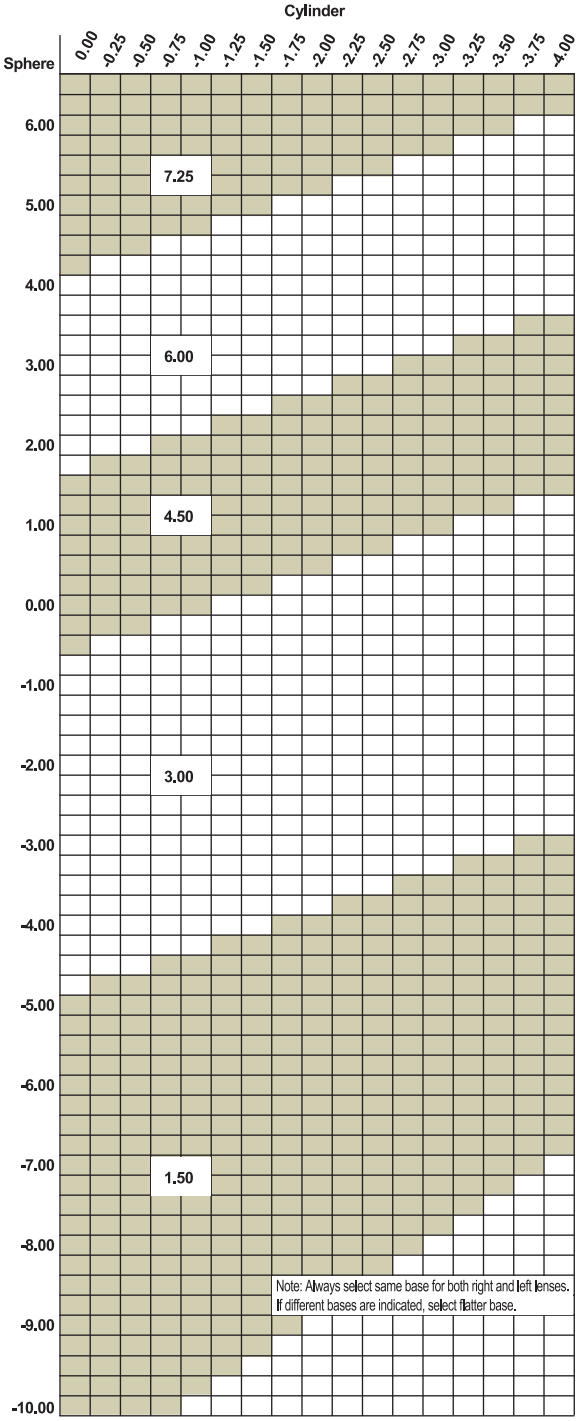

Polycarbonate

Illumina® LifeRx™ Photochromic Aspheric Progressive Addition Lenses

80mm Photochromic Progressive (Gray, Brown)

Base Curve	True Curve (1.530)	Front Radius	50mm SAG*	Back Curve	Back Radius	CT (mm) Nominal	ET (mm) Nominal	MRP Location	
1.50	1.61	329.192	0.945	-6.25	-84.800	8.7	15.5	4.0 A	0.0 In
3.00	3.00	176.666	1.778	-6.25	-84.800	8.6	13.0	4.0 A	0.0 In
4.50	4.50	117.777	2.684	-4.53	-116.997	10.7	9.5	4.0 A	0.0 In
6.00	6.00	88.333	3.612	-6.25	-84.800	9.7	9.0	4.0 A	0.0 In
7.25	7.25	73.103	4.408	-7.50	-70.667	9.8	9.5	4.0A	0.0 In

Base Curve	Gray	Brown
1.50	+0.75 to +3.50	+0.75 to +3.50
3.00	+0.75 to +3.50	+0.75 to +3.50
4.50	+0.75 to +3.50	+0.75 to +3.50
6.00	+0.75 to +3.50	+0.75 to +3.50
7.25	+0.75 to +3.50	+0.75 to +3.50

*Utilized for power calculation only, not for thickness calculation.

Click Here for Technical Tips

VISION-EASE LENS
WORLDWIDE

PRODUCT REFERENCE GUIDE

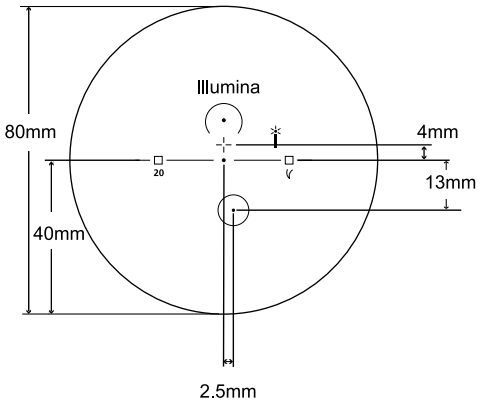

Base Curve Selection

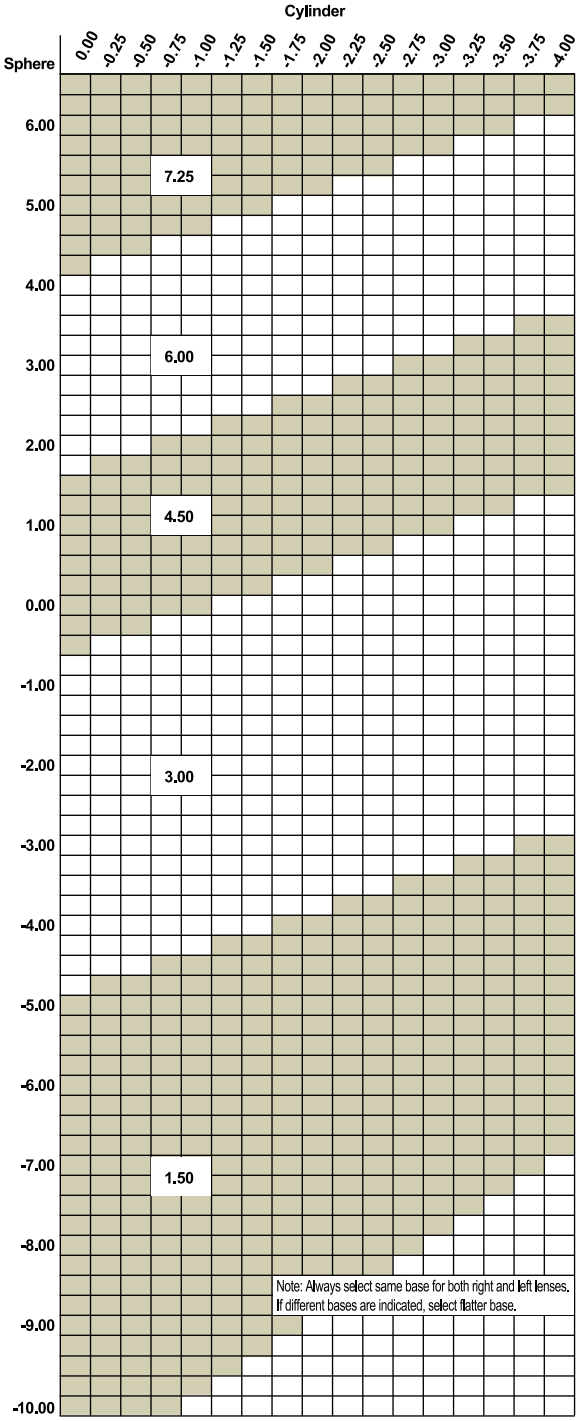

Polycarbonate

Illumina® Coppertone™ Polarized Progressive Addition Lenses

80mm Polarized Progressive (HEV Brown, HEV Gray)

Base Curve	True Curve (1.530)	Front Radius	50mm SAG*	Back Curve	Back Radius	CT (mm) Nominal	ET (mm) Nominal		MRP Location
1.50	1.61	329.192	0.945	-6.25	-84.800	8.7	15.5	4.0 A	0.0 In
3.00	3.03	174.917	1.800	-6.25	-84.800	8.6	13.0	4.0 A	0.0 In
4.50	4.50	117.777	2.684	- 4.53	-116.997	10.7	9.5	4.0 A	0.0 In
6.00	6.00	88.333	3.612	- 6.25	-84.800	9.7	9.0	4.0 A	0.0 In
7.25	7.25	73.103	4.408	- 7.50	-70.667	9.8	9.5	4.0 A	0.0 In

Base Curve	HEV Brown	HEV Gray
1.50	+0.75 to +3.50	+0.75 to +3.50
3.00	+0.75 to +3.50	+0.75 to +3.50
4.50	+0.75 to +3.50	+0.75 to +3.50
6.00	+0.75 to +3.50	+0.75 to +3.50
7.25	+0.75 to +3.50	+0.75 to +3.50

*Utilized for power calculation only, not for thickness calculation.

VISION-EASE LENS
WORLDWIDE

PRODUCT REFERENCE GUIDE

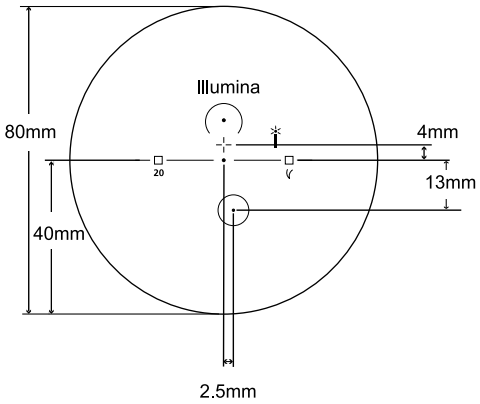

Base Curve Selection

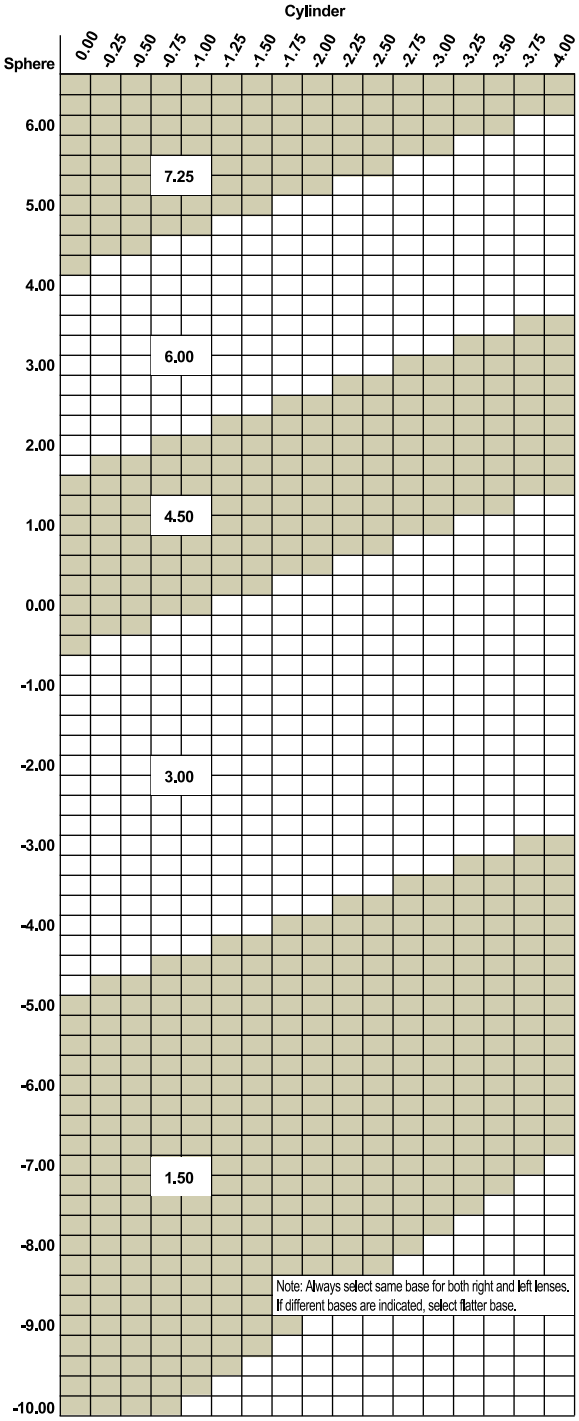

Polycarbonate

Illumina® SunRx® Polarized Aspheric Progressive Addition Lenses

80mm Polarized Progressive (Gray and Classic Green)

Base Curve	True Curve (1.530)	Front Radius	50mm SAG*	Back Curve	Back Radius	CT (mm) Nominal	ET (mm) Nominal	MRP Location	
1.50	1.61	329.192	0.945	-6.25	-84.800	8.7	15.5	4.0 A	0.0 In
3.00	3.03	174.917	1.800	-6.25	-84.800	8.6	13.0	4.0 A	0.0 In
4.50	4.50	117.777	2.684	-4.53	-116.997	10.7	9.5	4.0 A	0.0 In
6.00	6.00	88.333	3.612	-6.25	-84.800	9.7	9.0	4.0 A	0.0 In
**7.25	7.25	73.103	4.408	-7.50	-70.667	9.8	9.5	4.0 A	0.0 In

Base Curve	Gray	Classic Green
1.50	+0.75 to +3.50	+1.25 to +3.00
3.00	+0.75 to +3.50	+1.25 to +3.00
4.50	+0.75 to +3.50	+1.25 to +3.00
6.00	+0.75 to +3.50	+1.25 to +3.00
7.25	+0.75 to +3.50	_

*Utilized for power calculation only, not for thickness calculation.
**Not available in Classic Green.

Click Here for Technical Tips