VISION-EASE LENS
WORLDWIDE

Technical Services Department

Technical Tip

Finished Plano Polarized Processing Tips

Blocking
Prepare the lens for edging in the typical manner as other materials. Avoid leaving lenses blocked for over one hour as some blocking pad adhesives bond with coatings over extended periods of time. Pads should be evaluated for adhesion, loss of adhesives on the lens, and ease of removal.

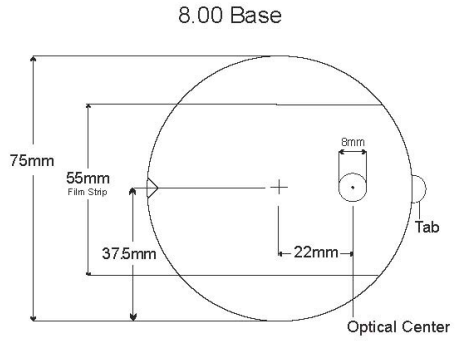

The optical center of the 8.00 base is in an 8mm diameter circle, 22mm from the geometric center, along a line connecting the geometric center and the center of the tab. The 6.00 base is NOT decentered.

Edging
Most typical edging equipment will provide excellent results if the sharpness of the cutter is maintained. Although actual cutting must be accomplished without liquid coolant, many edgers provide a wet final cycle that slightly polishes the final edge. Router style edging, creating the least amount of heat, is recommended for polycarbonate lenses. Wheel type edgers must be fit with an aggressive roughing wheel designed for polycarbonate, and differential to finishing diamond adjusted to about 0.75 millimeter. Wet cycles must not remove extra material. Monitor sizing for accuracy and keep cutting chambers clean at all times.

For additional questions call the Technical Services Hotline 800-367-2544 x 5301
Or e-mail techservices@vision-ease.com