VISION-EASE LENS
WORLDWIDE

PRODUCT REFERENCE GUIDE

Polycarbonate

Continua® Aspheric Finished Single Vision

65mm Aspheric Finished Single Vision

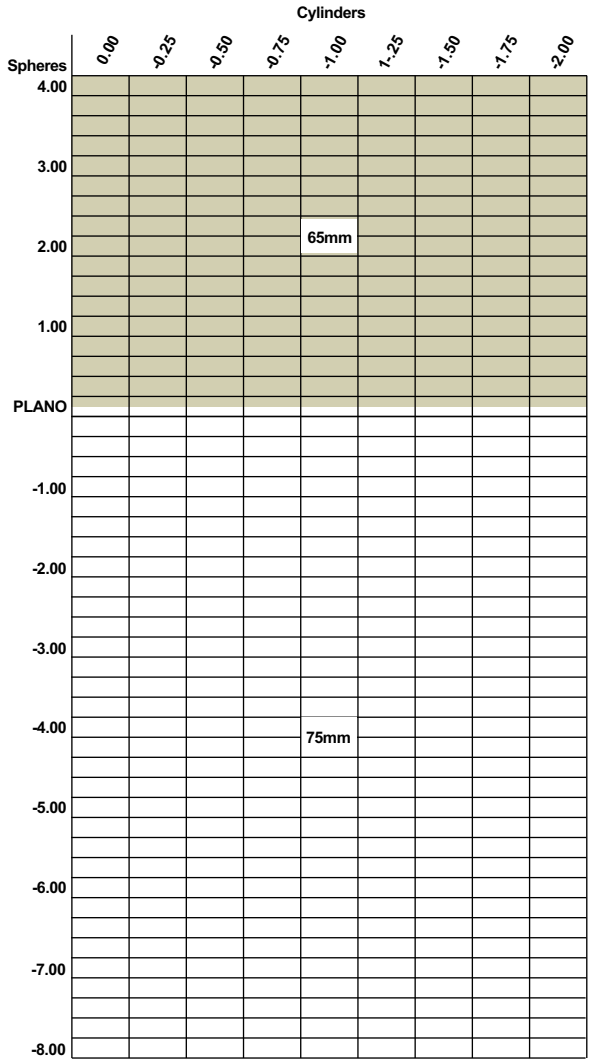

Technical data refers to colored area

65mm Aspheric FSV, Plus w/Minus Cyl

Sphere Power Up to -2.00 cyl	Base Curve	Curve Radius	Center Thickness
+4.00	6.01	88.186	4.5
+3.75	6.01	88.186	4.2
+3.50	6.01	88.186	4.0
+3.25	6.01	88.186	3.8
+3.00	5.59	94.812	3.7
+2.75	5.59	94.812	3.5
+2.50	5.59	94.812	3.2
+2.25	5.16	102.713	3.1
+2.00	5.16	102.713	2.8
+1.75	5.16	102.713	2.6
+1.50	4.73	112.051	2.5
+1.25	4.73	112.051	2.2
+1.00	4.73	112.051	2.0
+0.75	4.28	123.832	1.9
+0.50	4.28	123.832	1.7
+0.25	4.28	123.832	1.6
Plano	4.28	123.832	1.6

Click Here for Technical Tips

VISION-EASE LENS
WORLDWIDE

PRODUCT REFERENCE GUIDE

Polycarbonate

Continua® Finished Single Vision

75mm Spherical Finished Single Vision
1.5mm Center Thickness

Sphere Power Up to -2.00 cyl	Base Curve	Curve Radius	Center Thickness
Plano	5.82	91.065	1.5
-0.25	5.60	94.643	1.5
-0.50	5.38	98.513	1.5
-0.75	5.16	102.713	1.5
-1.00	4.93	107.505	1.5
-1.25	4.71	112.527	1.5
-1.50	4.49	118.040	1.5
-1.75	4.71	112.527	1.4
-2.00	4.49	118.040	1.4
-2.25	4.27	124.122	1.4
-2.50	4.04	131.188	1.4
-2.75	3.82	138.743	1.4
-3.00	3.60	147.222	1.4
-3.25	3.82	138.743	1.3
-3.50	3.60	147.222	1.3
-3.75	3.37	157.270	1.3
-4.00	3.15	168.254	1.3
-4.25	2.90	182.759	1.3
-4.50	2.67	198.502	1.3
-4.75	2.90	182.759	1.3
-5.00	2.67	198.502	1.3
-5.25	2.45	216.327	1.3
-5.50	2.22	238.739	1.3
-5.75	2.00	265.000	1.3
-6.00	1.77	299.435	1.3
-6.25	2.04	259.804	1.3
-6.50	1.82	291.209	1.3
-6.75	2.04	259.804	1.3
-7.00	1.82	291.209	1.3
-7.25	1.60	331.250	1.3
-7.50	1.38	384.058	1.3
-7.75	1.15	460.870	1.3
-8.00	0.93	569.892	1.3

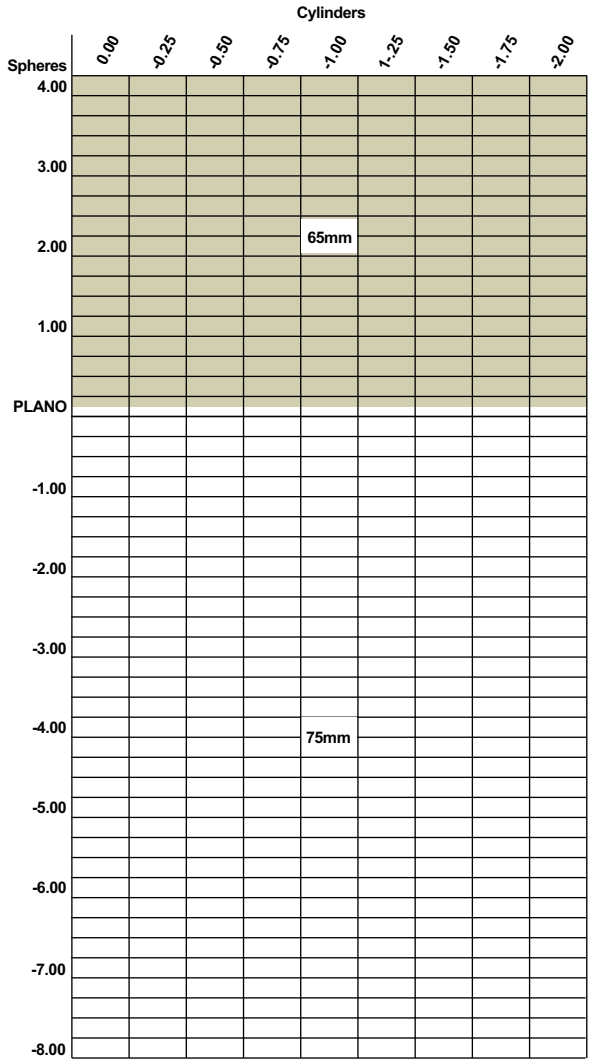

Technical data refers to colored area

Click Here for Technical Tips

VISION-EASE LENS
WORLDWIDE

PRODUCT REFERENCE GUIDE

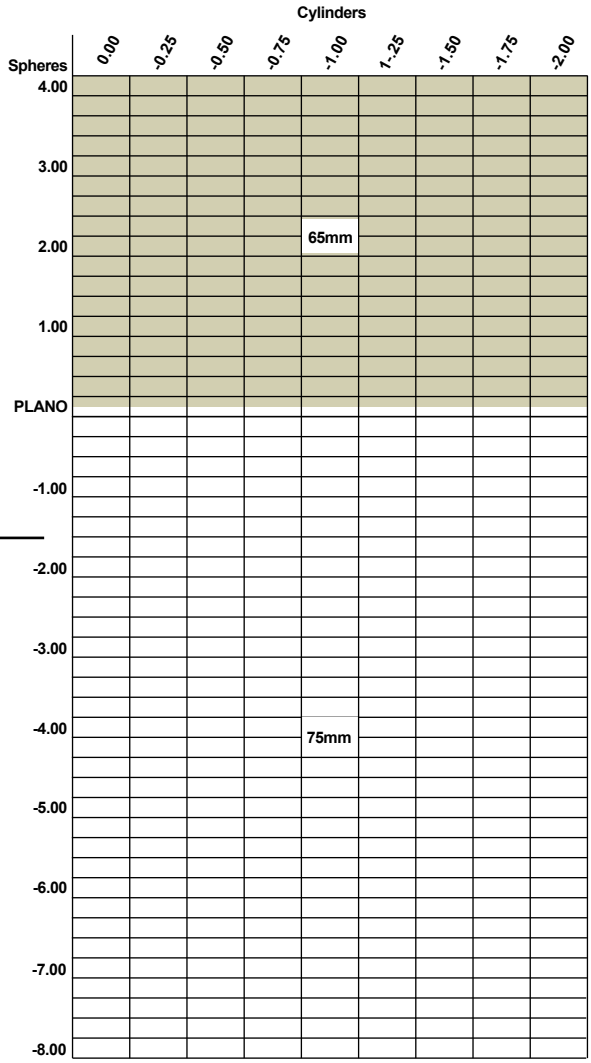

Polycarbonate

Continua® Anti-Reflective Finished Single Vision

65mm Anti-Reflective Aspheric Finished Single Vision

Sphere Power Up to -2.00 cyl	Base Curve	Curve Radius	Center Thickness
+4.00	6.01	88.186	4.5
+3.75	6.01	88.186	4.2
+3.50	6.01	88.186	4.0
+3.25	6.01	88.186	3.8
+3.00	5.59	94.812	3.7
+2.75	5.59	94.812	3.5
+2.50	5.59	94.812	3.2
+2.25	5.16	102.713	3.1
+2.00	5.16	102.713	2.8
+1.75	5.16	102.713	2.6
+1.50	4.73	112.051	2.5
+1.25	4.73	112.051	2.2
+1.00	4.73	112.051	2.0
+0.75	4.28	123.832	1.9
+0.50	4.28	123.832	1.7
+0.25	4.28	123.832	1.6
Plano	4.28	123.832	1.6

Technical data refers to colored area

Click Here for Technical Tips

VISION-EASE LENS
WORLDWIDE

PRODUCT REFERENCE GUIDE

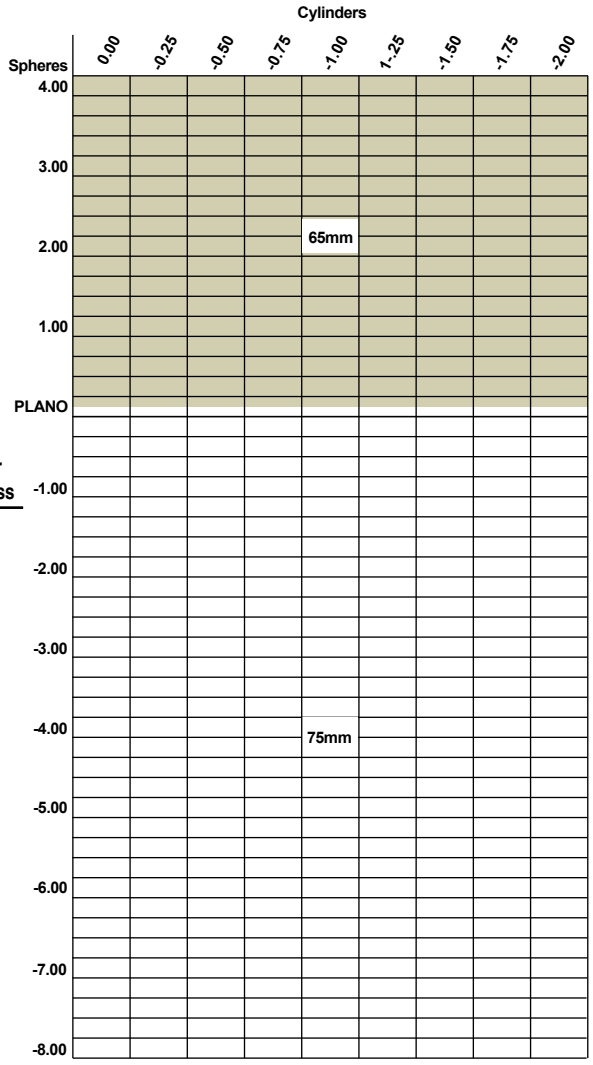

Polycarbonate

Continua® Anti-Reflective Finished Single Vision

75mm Anti-Reflective Spherical Finished Single Vision

Sphere Power Up to -2.00 cyl	0.00	-0.25	-0.50	-0.75	-1.00	-1.25	-1.50	-1.75	-2.00	Center Thickness
0.00	5.42	5.42	5.42	5.42	5.42	5.42	5.42	5.42	5.42	1.5
-0.25	5.19	5.19	5.19	5.19	5.19	5.19	5.19	5.19	5.19	1.5
-0.50	4.97	4.97	4.97	4.97	4.97	4.97	4.97	4.97	4.97	1.5
-0.75	4.97	4.97	4.97	4.97	4.97	4.97	4.97	4.97	4.97	1.5
-1.00	4.74	4.74	4.74	4.74	4.74	4.74	4.74	4.74	4.74	1.5
-1.25	4.51	4.51	4.51	4.51	4.51	4.51	4.51	4.51	4.51	1.5
-1.50	4.30	4.30	4.30	4.30	4.30	4.30	4.30	4.30	4.30	1.5
-1.75	4.51	4.51	4.51	4.51	4.51	4.51	4.51	4.51	4.51	1.4
-2.00	4.30	4.30	4.30	4.30	4.30	4.30	4.30	4.30	4.30	1.4
-2.25	4.07	4.07	4.07	4.07	4.07	4.07	4.07	4.07	4.07	1.4
-2.50	3.74	3.74	3.74	3.74	3.74	3.74	3.74	3.74	3.74	1.4
-2.75	4.07	4.07	4.07	4.07	4.07	4.07	4.07	4.07	3.74	1.4
-3.00	3.74	3.74	3.74	3.74	3.74	3.74	3.74	3.74	3.50	1.4
-3.25	3.50	3.50	3.50	3.50	3.50	3.50	3.50	3.50	3.27	1.3
-3.50	3.27	3.27	3.27	3.27	3.27	3.27	3.27	3.27	3.04	1.3
-3.75	3.50	3.50	3.50	3.50	3.50	3.50	3.27	3.04	2.75	1.3
-4.00	3.27	3.27	3.27	3.27	3.27	3.27	3.17	2.75	2.62	1.3
-4.25	3.04	3.04	3.04	3.04	3.04	3.04	2.75	2.62	2.49	1.3
-4.50	2.75	2.75	2.75	2.75	2.75	2.75	2.62	2.49	2.26	1.3
-4.75	3.04	3.04	3.04	3.04	2.75	2.62	2.49	2.26	2.03	1.3
-5.00	2.75	2.75	2.75	2.75	2.62	2.49	2.26	2.03	1.81	1.3
-5.25	2.62	2.62	2.62	2.62	2.49	2.26	2.03	1.81	1.58	1.3
-5.50	2.49	2.49	2.49	2.49	2.26	2.03	1.81	1.58	1.36	1.3
-5.75	2.62	2.62	2.49	2.26	2.03	1.81	1.58	1.36	1.13	1.3
-6.00	2.49	2.49	2.26	2.03	1.81	1.58	1.36	1.09	0.90	1.3
-6.25	2.04	2.04	2.04	2.04	2.04	2.04	2.04	2.04	2.04	1.3
-6.50	1.82	1.82	1.82	1.82	1.82	1.82	1.82	1.82	1.82	1.3
-6.75	2.04	2.04	2.04	2.04	2.04	2.04	2.04	2.04	2.04	1.3
-7.00	1.82	1.82	1.82	1.82	1.82	1.82	1.82	1.82	1.82	1.3
-7.25	1.60	1.60	1.60	1.60	1.60	1.60	1.60	1.60	1.60	1.3
-7.50	1.38	1.38	1.38	1.38	1.38	1.38	1.38	1.38	1.38	1.3
-7.75	1.15	1.15	1.15	1.15	1.15	1.15	1.15	1.15	1.15	1.3
-8.00	0.93	0.93	0.93	0.93	0.93	0.93	0.93	0.93	0.93	1.3

Technical data refers to colored area

Conversions

Base / Radius	Base / Radius
5.42/97.786	2.26/234.513
5.19/102.119	2.04/259.804
4.97/106.640	2.03/261.084
4.74/111.814	1.82/291.209
4.51/117.517	1.81/292.818
4.30/123.256	1.60/331.250
4.07/130.221	1.58/335.443
3.74/141.711	1.38/384.058
3.50/151.429	1.36/389.706
3.27/162.080	1.15/460.870
3.17/167.192	1.13/469.027
3.04/174.342	1.09/486.239
2.75/192.727	0.93/569.892
2.62/202.290	0.90/588.889
2.49/212.851	

Click Here for Technical Tips

VISION-EASE LENS
WORLDWIDE

PRODUCT REFERENCE GUIDE

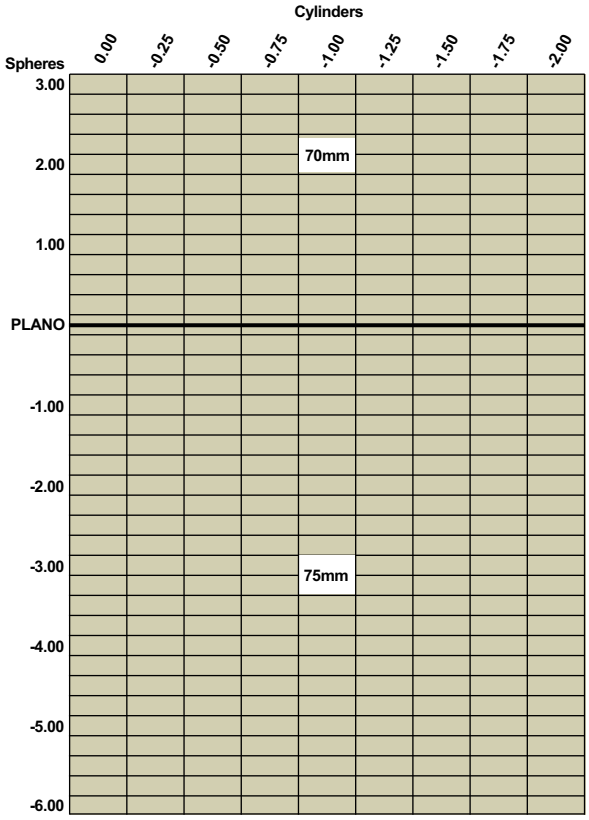

Polycarbonate

Continua® Finished Single Vision
High Impact Safety 2.0mm
70mm/75mm Finished Single Vision

Sphere Power Up to -2.00 cyl	Base Curve	Curve Radius	Center Thickness
+3.00	7.27	72.902	5.37
+2.75	7.07	74.965	5.09
+2.50	6.86	77.259	4.80
+2.25	6.66	79.580	4.52
+2.00	6.47	81.917	4.26
+1.75	6.26	84.665	3.97
+1.50	6.04	87.748	3.68
+1.25	5.82	91.065	3.39
+1.00	5.60	94.643	3.10
+0.75	5.38	98.513	2.81
+0.50	5.16	102.713	2.52
+0.25	4.93	107.505	2.23
Plano	5.82	91.065	2.1
-0.25	5.60	94.643	2.1
-0.50	5.38	98.513	2.1
-0.75	5.16	102.713	2.1
-1.00	4.93	107.505	2.1
-1.25	4.71	112.527	2.1
-1.50	4.49	118.040	2.1
-1.75	4.71	112.527	2.1
-2.00	4.49	118.040	2.1
-2.25	4.27	124.122	2.1
-2.50	4.04	131.188	2.1
-2.75	3.82	138.743	2.1
-3.00	3.60	147.222	2.1
-3.25	3.82	138.743	2.1
-3.50	3.60	147.222	2.1
-3.75	3.37	157.270	2.1
-4.00	3.15	168.254	2.1
-4.25	2.90	182.759	2.1
-4.50	2.67	198.502	2.1
-4.75	2.90	182.759	2.1
-5.00	2.67	198.502	2.1
-5.25	2.45	216.327	2.1
-5.50	2.22	238.739	2.1
-5.75	2.00	265.000	2.1
-6.00	1.77	299.435	2.1

Click Here for Technical Tips

VISION-EASE LENS
WORLDWIDE

PRODUCT REFERENCE GUIDE

Polycarbonate

Continua® Tintable Aspheric Finished Single Vision

65mm Aspheric Finished Single Vision

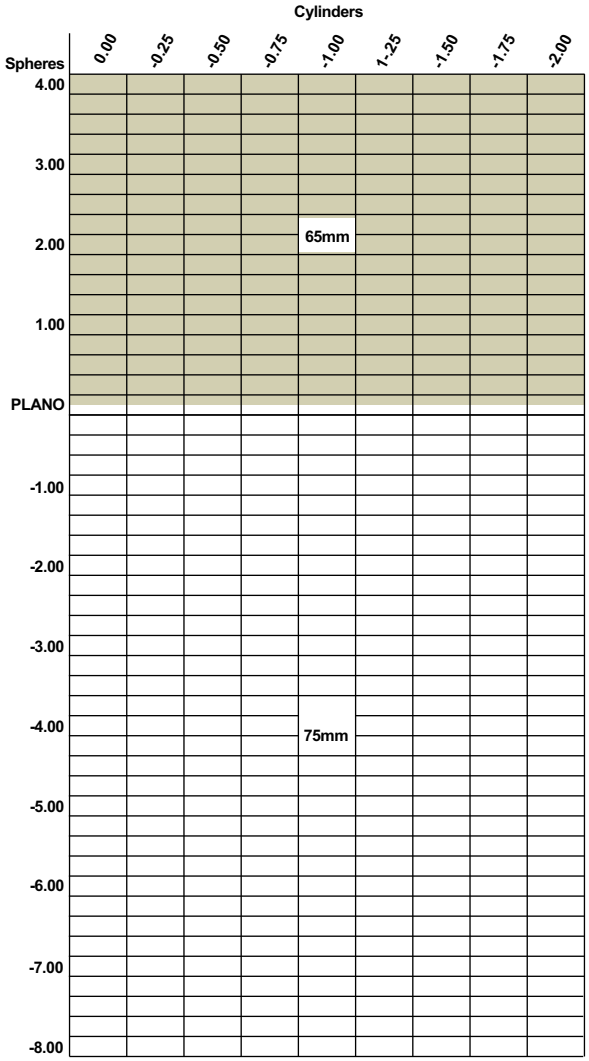

Technical data refers to colored area

65mm Aspheric FSV, Plus w/Minus Cyl

Sphere Power Up to -2.00 cyl	Base Curve	Curve Radius	Center Thickness
+4.00	6.01	88.186	4.5
+3.75	6.01	88.186	4.2
+3.50	6.01	88.186	4.0
+3.25	6.01	88.186	3.8
+3.00	5.59	94.812	3.7
+2.75	5.59	94.812	3.5
+2.50	5.59	94.812	3.2
+2.25	5.16	102.713	3.1
+2.00	5.16	102.713	2.8
+1.75	5.16	102.713	2.6
+1.50	4.73	112.051	2.5
+1.25	4.73	112.051	2.2
+1.00	4.73	112.051	2.0
+0.75	4.28	123.832	1.9
+0.50	4.28	123.832	1.7
+0.25	4.28	123.832	1.6

Click Here for Technical Tips

VISION-EASE LENS
WORLDWIDE

PRODUCT REFERENCE GUIDE

Polycarbonate

Continua® Tintable Finished Single Vision

75mm Spherical Finished Single Vision
1.5mm Center Thickness

Sphere Power Up to -2.00 cyl	Base Curve	Curve Radius	Center Thickness
Plano	5.82	91.065	1.5
-0.25	5.60	94.643	1.5
-0.50	5.38	98.513	1.5
-0.75	5.16	102.713	1.5
-1.00	4.93	107.505	1.5
-1.25	4.71	112.527	1.5
-1.50	4.49	118.040	1.5
-1.75	4.71	112.527	1.4
-2.00	4.49	118.040	1.4
-2.25	4.27	124.122	1.4
-2.50	4.04	131.188	1.4
-2.75	3.82	138.743	1.4
-3.00	3.60	147.222	1.4
-3.25	3.82	138.743	1.3
-3.50	3.60	147.222	1.3
-3.75	3.37	157.270	1.3
-4.00	3.15	168.254	1.3
-4.25	2.90	182.759	1.3
-4.50	2.67	198.502	1.3
-4.75	2.90	182.759	1.3
-5.00	2.67	198.502	1.3
-5.25	2.45	216.327	1.3
-5.50	2.22	238.739	1.3
-5.75	2.00	265.000	1.3
-6.00	1.77	299.435	1.3
-6.25	2.04	259.804	1.3
-6.50	1.82	291.209	1.3
-6.75	2.04	259.804	1.3
-7.00	1.82	291.209	1.3
-7.25	1.60	331.250	1.3
-7.50	1.38	384.058	1.3
-7.75	1.15	460.870	1.3
-8.00	0.93	569.892	1.3

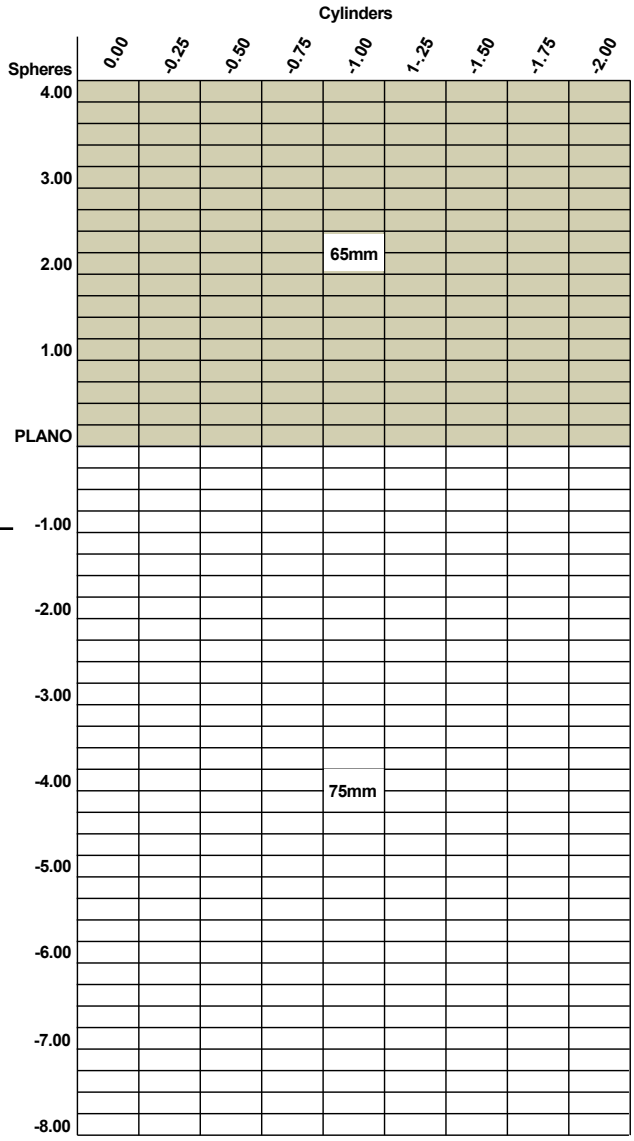

Technical data refers to colored area

Click Here for Technical Tips

VISION-EASE LENS
WORLDWIDE

PRODUCT REFERENCE GUIDE

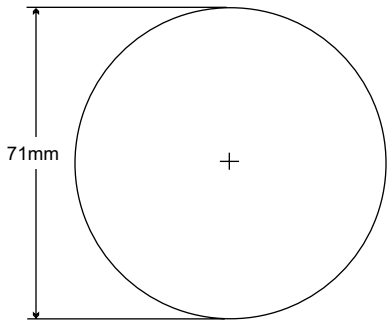

Polycarbonate

Continua® Semi-Finished Single Vision

71mm Spherical Single Vision - Thermal Coated

Base Curve	True Curve (1.530)	Front Radius	50mm SAG*	Back Curve	Back Radius	CT (mm) Nominal	ET (mm) Nominal
0.50	0.45	1177.778	0.265	-6.25	-84.800	9.8	17.0
1.00	1.13	469.027	0.667	-6.25	-84.800	9.0	15.5
2.00	2.03	261.084	1.200	-6.25	-84.800	9.6	15.0
3.00	2.94	180.272	1.742	-6.25	-84.800	9.2	13.2
4.00	4.07	130.221	2.422	-6.25	-84.800	9.1	12.0
5.25	5.20	101.923	3.114	-6.25	-84.800	8.6	10.0
6.25	6.33	83.728	3.819	-6.25	-84.800	8.1	8.0
7.50	7.46	71.046	4.544	-6.25	-84.800	9.0	7.3
8.50	8.60	61.628	5.299	-6.25	-84.800	9.5	6.0
9.75	9.73	54.471	6.076	-7.50	-70.667	9.5	6.0

*Utilized for power calculation only, not for thickness calculation.

Base Curve Selection

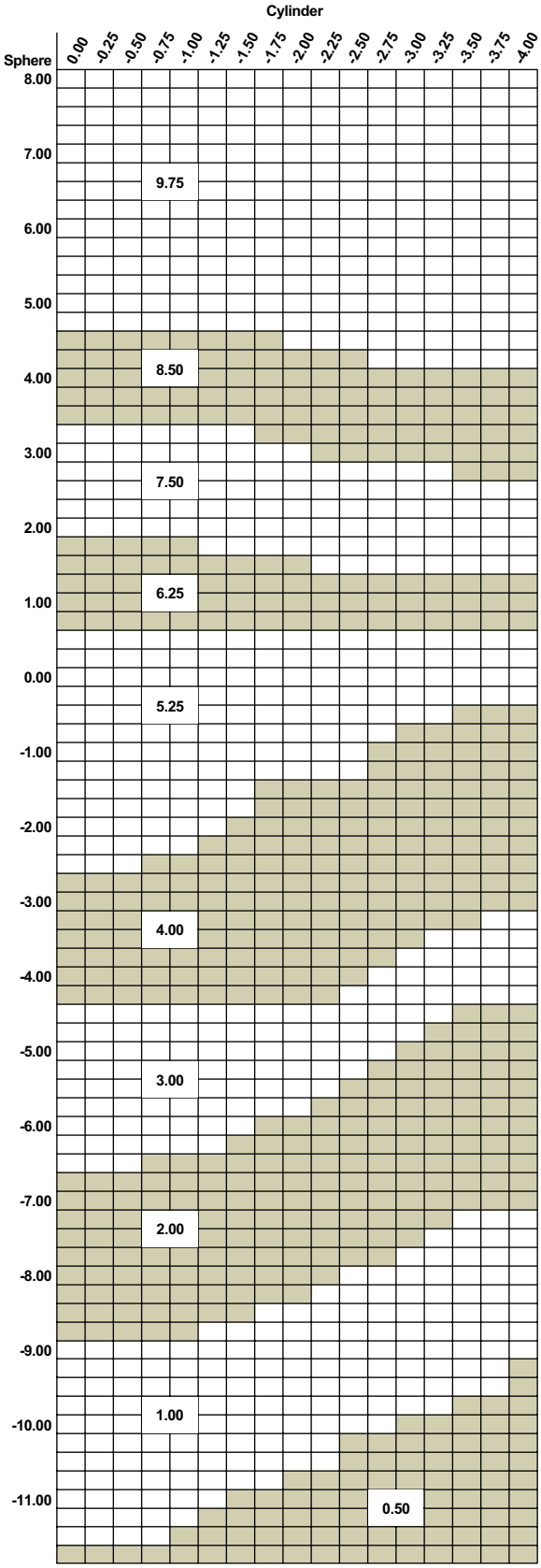

Click Here for Technical Tips

VISION-EASE LENS
WORLDWIDE

PRODUCT REFERENCE GUIDE

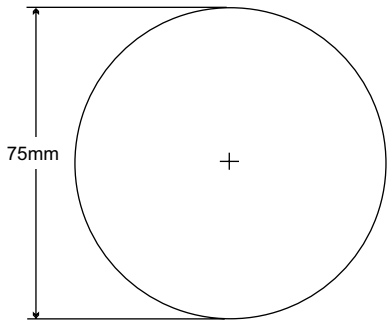

Polycarbonate

Continua® Semi-Finished Single Vision

75mm Spherical Single Vision - Thermal Coated

Base Curve	True Curve (1.530)	Front Radius	50mm SAG*	Back Curve	Back Radius	CT (mm) Nominal	CT (mm) Minimum	ET (mm) Nominal
0.50	0.45	1177.778	0.265	-6.25	-84.800	9.4	8.9	17.5
1.00	1.13	469.027	0.667	-6.25	-84.800	10.2	9.7	17.4
2.00	2.03	261.084	1.200	-6.25	-84.800	8.0	7.5	14.0
3.00	2.94	180.272	1.742	-6.25	-84.800	9.2	8.7	14.0
4.00	4.07	130.221	2.422	-6.25	-84.800	8.8	8.3	12.0
5.25	5.20	101.923	3.114	-6.25	-84.800	8.6	8.1	10.2
6.25	6.33	83.728	3.819	-6.25	-84.800	8.1	7.6	8.0
7.50	7.46	71.046	4.544	-6.25	-84.800	9.0	8.5	7.0
8.50	8.60	61.628	5.299	-6.25	-84.800	10.0	9.5	6.0
9.75	9.73	54.471	6.076	-7.50	-70.667	10.0	9.5	5.9

*Utilized for power calculation only, not for thickness calculation.

Click Here for Technical Tips

Base Curve Selection

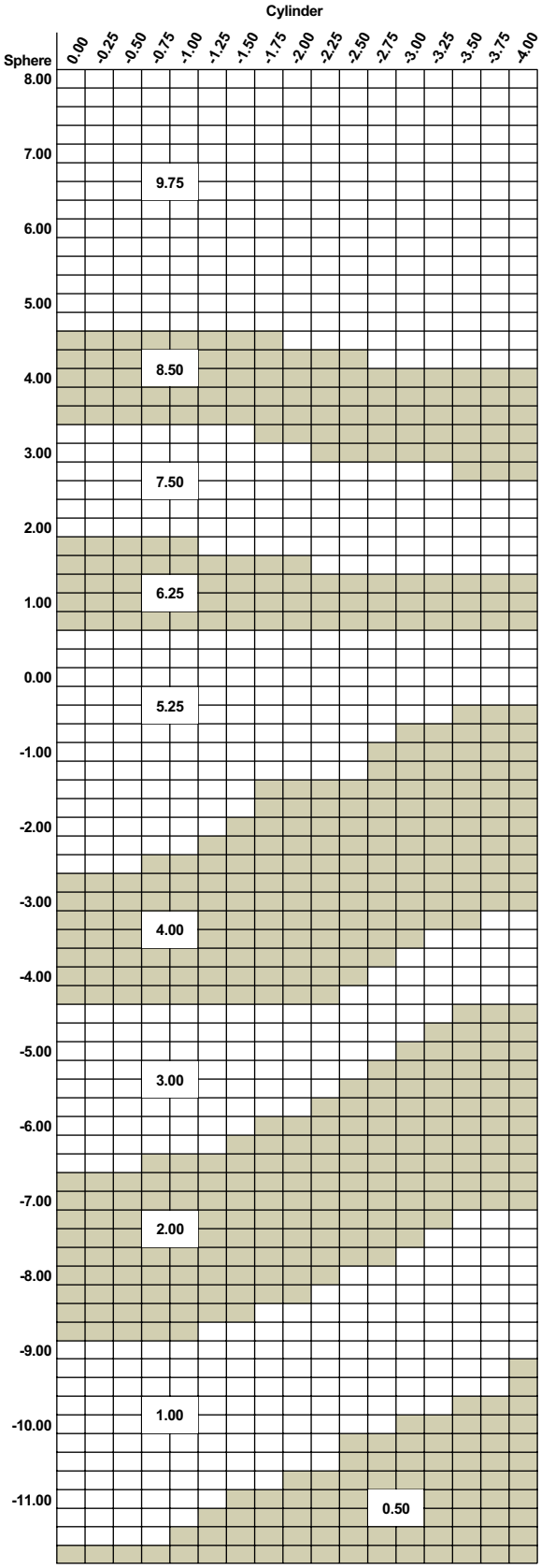

VISION-EASE LENS
WORLDWIDE

PRODUCT REFERENCE GUIDE

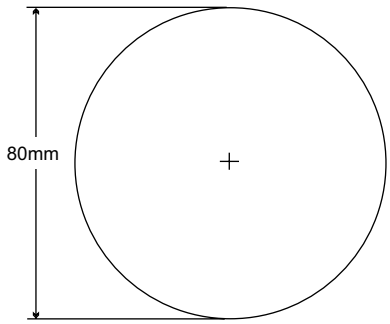

Polycarbonate

Continua® Semi-Finished Single Vision

80mm Spherical Single Vision - Thermal Coated

Base Curve	True Curve (1.530)	Front Radius	50mm SAG*	Back Curve	Back Radius	CT (mm) Nominal	CT (mm) Minimum	ET (mm) Nominal
0.50	0.45	1177.778	0.265	-6.25	-84.800	9.5	9.0	18.8
1.00	1.13	469.027	0.667	-6.25	-84.800	10.3	9.8	18.6
2.00	2.03	261.084	1.200	-6.25	-84.800	8.1	7.6	15.0
3.00	2.94	180.272	1.742	-6.25	-84.800	9.3	8.8	14.8
4.00	4.07	130.221	2.422	-6.25	-84.800	8.8	8.3	12.6
5.25	5.20	101.923	3.114	-6.25	-84.800	8.6	8.1	10.5
6.25	6.33	83.728	3.819	-6.25	-84.800	8.1	7.6	8.0
7.50	7.46	71.046	4.544	-6.25	-84.800	9.0	8.5	6.7
8.50	8.60	61.628	5.299	-7.50	-70.667	9.0	8.5	6.6
9.75	9.73	54.471	6.076	-7.50	-70.667	10.9	10.4	5.8

*Utilized for power calculation only, not for thickness calculation.

Base Curve Selection

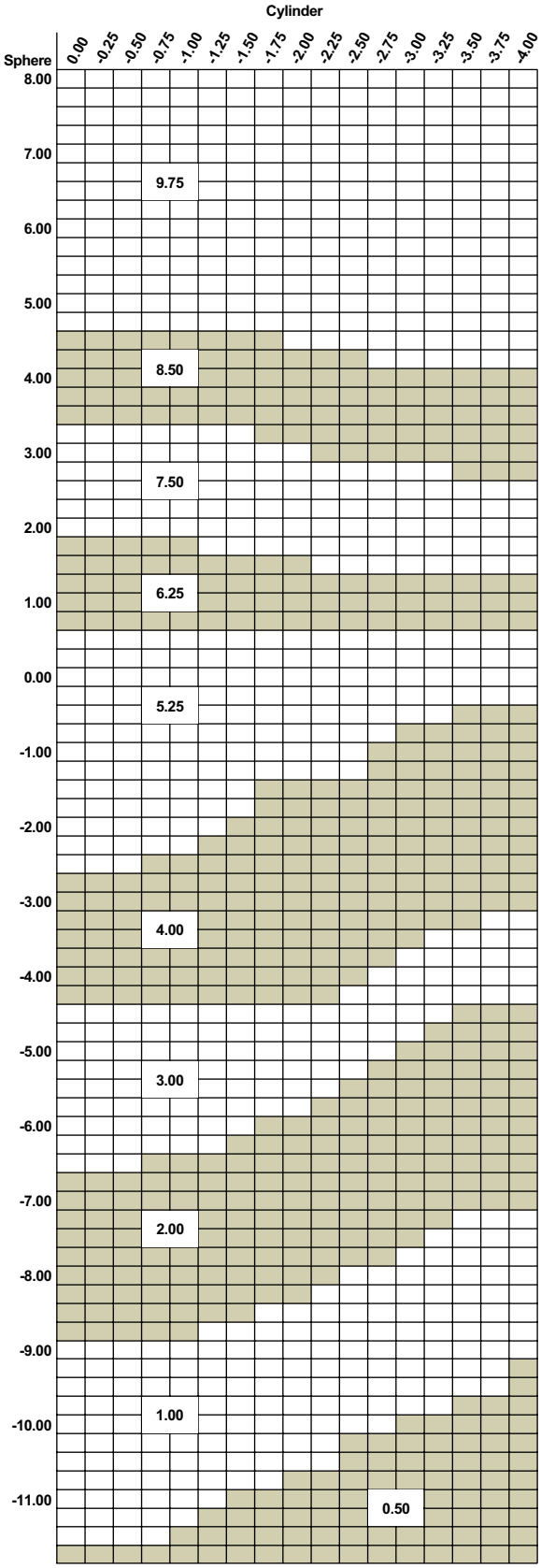

Click Here for Technical Tips

VISION-EASE LENS
WORLDWIDE

PRODUCT REFERENCE GUIDE

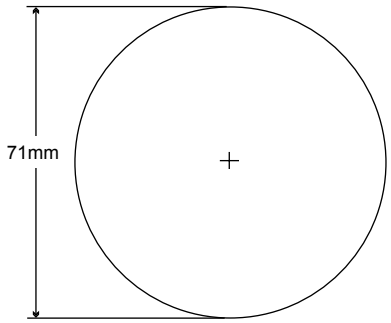

Polycarbonate

Continua® Tintable Semi-Finished Single Vision

71mm Tintable Semi-Finished Single Vision

Base Curve	True Curve (1.530)	Front Radius	50mm SAG*	Back Curve	Back Radius	CT (mm) Nominal	ET (mm) Nominal
0.50	0.45	1177.778	0.265	-6.25	-84.800	9.8	17.0
1.00	1.13	469.027	0.667	-6.25	-84.800	9.0	15.5
2.00	2.03	261.084	1.200	-6.25	-84.800	9.6	15.0
3.00	2.94	180.272	1.742	-6.25	-84.800	9.2	13.2
4.00	4.07	130.221	2.422	-6.25	-84.800	9.1	12.0
5.25	5.20	101.923	3.114	-6.25	-84.800	8.6	10.0
6.25	6.33	83.728	3.819	-6.25	-84.800	8.1	8.0
7.50	7.46	71.046	4.544	-6.25	-84.800	9.0	7.3
8.50	8.60	61.628	5.299	-6.25	-84.800	9.5	6.0
9.75	9.73	54.471	6.076	-7.50	-70.667	9.5	6.0

*Utilized for power calculation only, not for thickness calculation.

Base Curve Selection

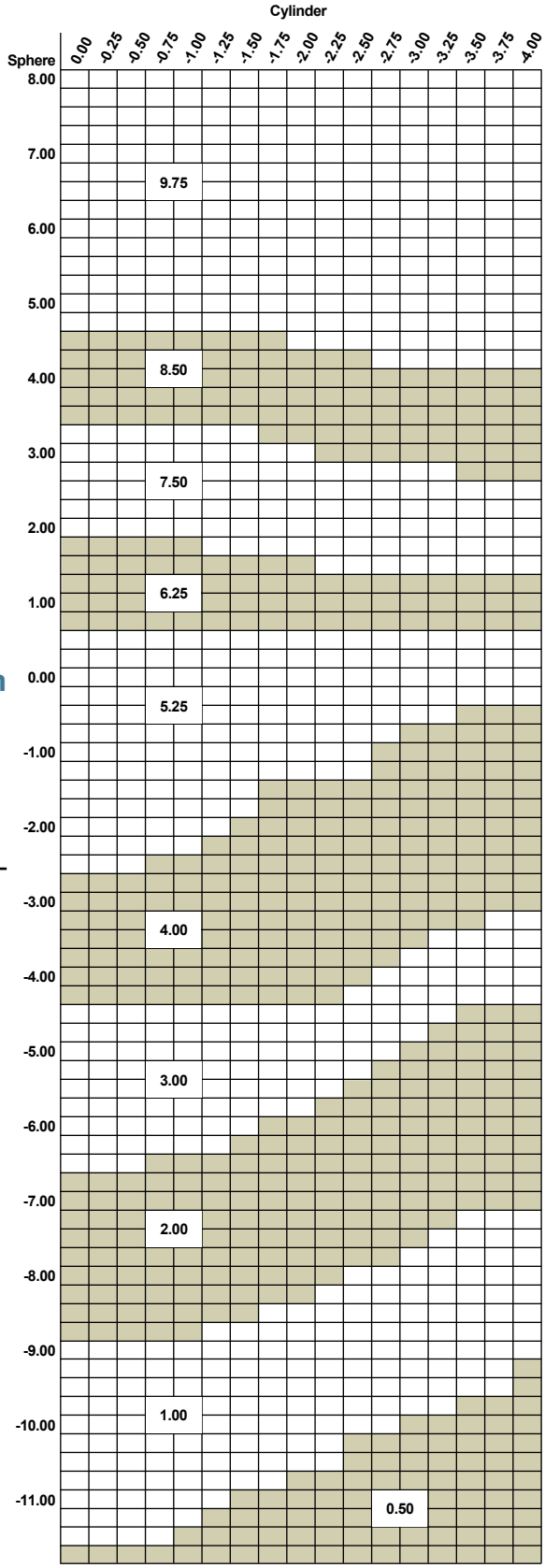

Click Here for Technical Tips

VISION-EASE LENS
WORLDWIDE

PRODUCT REFERENCE GUIDE

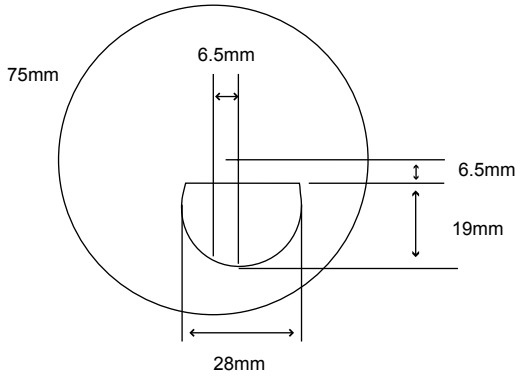

Polycarbonate

Continua® Bifocal

75mm Spherical D28 Bifocal

Base Curve	True Curve (1.530)	Front Radius	50mm SAG*	Back Curve	Back Radius	CT (mm) Nominal	ET (mm) Nominal	Drop	Inset
0.50	0.45	1177.778	0.265	-6.25	-84.800	9.4	17.5	6.5 D	6.5 In
2.00	2.03	261.084	1.200	-6.25	-84.800	8.0	14.0	6.5 D	6.5 In
4.00	4.07	130.221	2.422	-6.25	-84.800	8.8	12.0	6.5 D	6.5 In
6.25	6.33	83.728	3.819	-6.25	-84.800	8.1	8.0	6.5 D	6.5 In
8.50	8.60	61.628	5.299	-6.25	-84.800	10.0	6.0	6.5 D	6.5 In

Base Curve	Clear
0.50	+1.00 to +4.00
2.00	+0.75 to +4.00
4.00	+0.75 to +4.00
6.25	+0.75 to +4.00
8.50	+0.75 to +4.00

*Utilized for power calculation only, not for thickness calculation.

Base Curve Selection

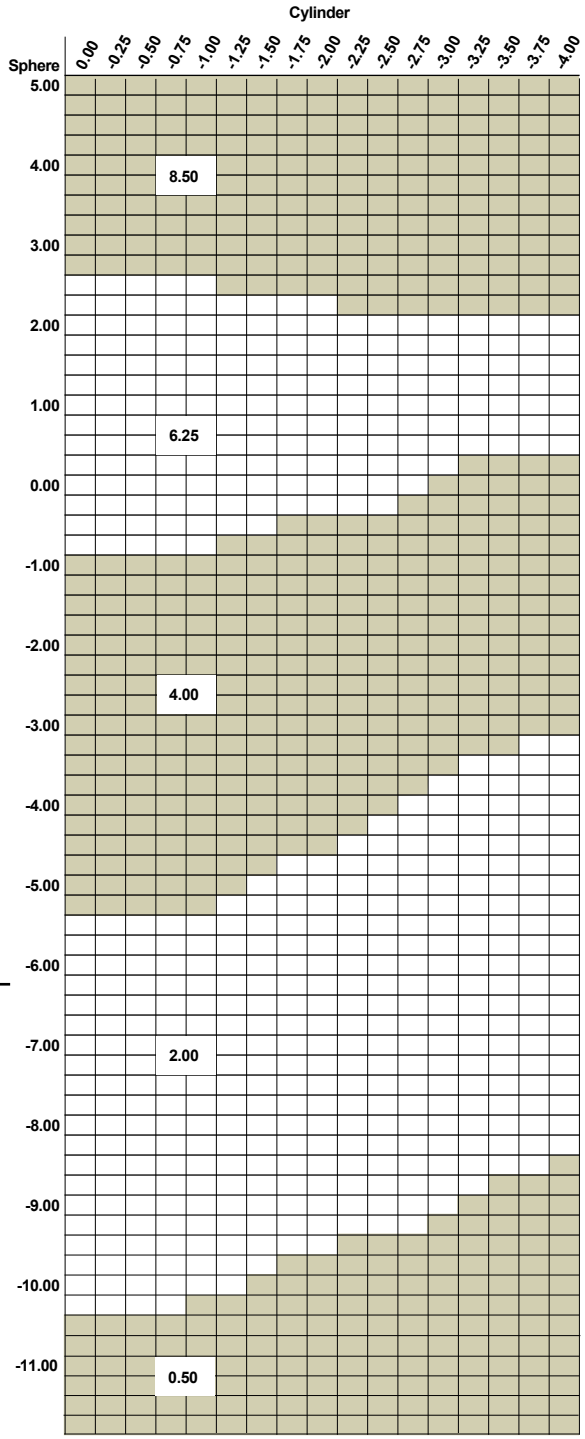

Click Here for Technical Tips

VISION-EASE LENS
WORLDWIDE

PRODUCT REFERENCE GUIDE

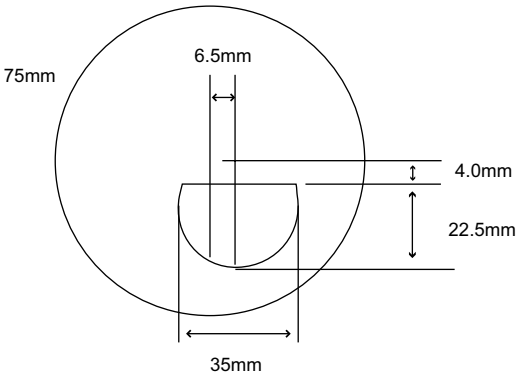

Base Curve Selection

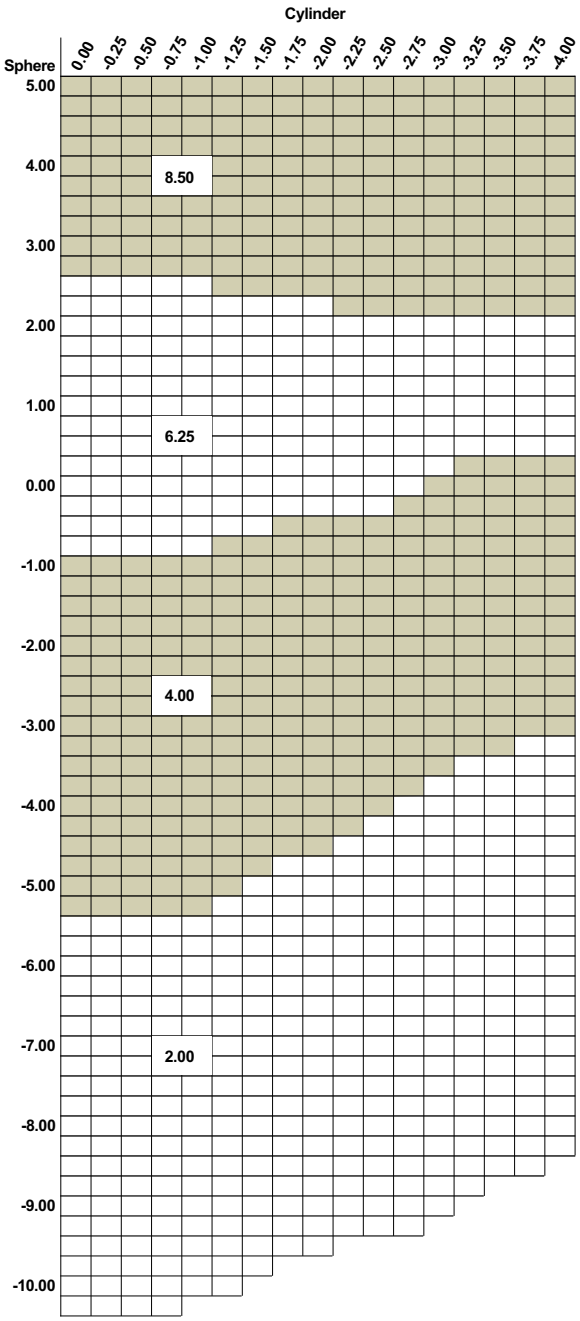

Polycarbonate

Continua® Bifocal

75mm Spherical D35 Bifocal

Base Curve	True Curve (1.530)	Front Radius	50mm SAG*	Back Curve	Back Radius	CT (mm) Nominal	ET (mm) Nominal	Drop	Inset
2.00	2.03	261.084	1.200	-6.25	-84.800	8.0	14.0	4.0 D	6.5 In
4.00	4.07	130.221	2.422	-6.25	-84.800	8.8	12.0	4.0 D	6.5 In
6.25	6.33	83.728	3.819	-6.25	-84.800	8.1	8.0	4.0 D	6.5 In
8.50	8.60	61.628	5.299	-6.25	-84.800	10.0	6.0	4.0 D	6.5 In

Base Curve	Clear
2.00	+1.00 to +3.00
4.00	+1.00 to +3.00
6.25	+1.00 to +3.00
8.50	+1.00 to +3.00

*Utilized for power calculation only, not for thickness calculation.

Click Here for Technical Tips

VISION-EASE LENS
WORLDWIDE

PRODUCT REFERENCE GUIDE

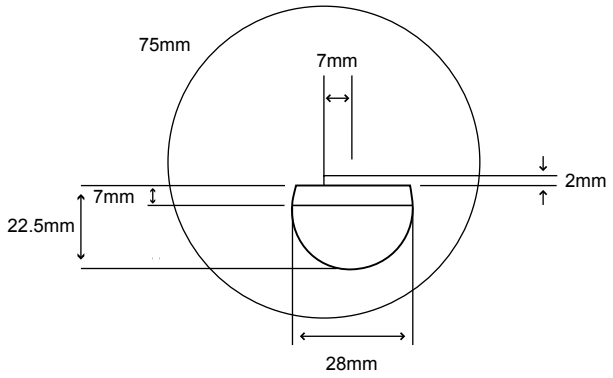

Base Curve Selection

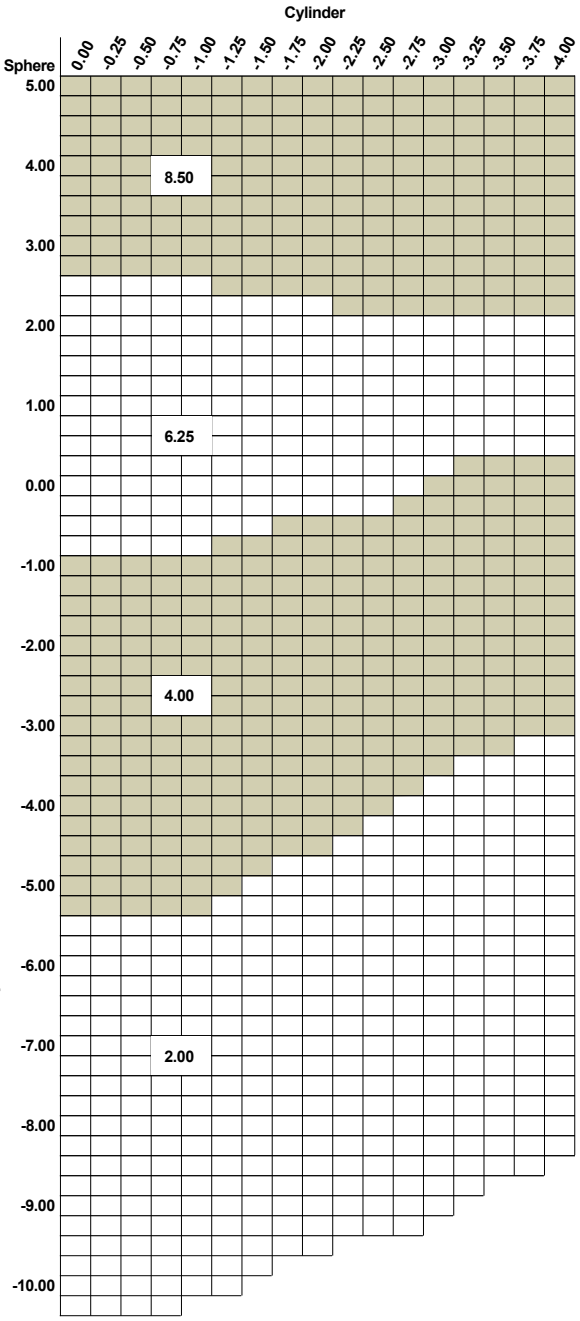

Polycarbonate

Continua® Trifocal

75mm Spherical 7x28 Trifocal

Base Curve	True Curve (1.530)	Front Radius	50mm SAG*	Back Curve	Back Radius	CT (mm) Nominal	ET (mm) Nominal	Drop	Inset
2.00	2.03	261.084	1.200	-6.25	-84.800	8.0	13.9	2.0 D	7.0 In
4.00	4.07	130.221	2.422	-6.25	-84.800	8.8	12.0	2.0 D	7.0 In
6.25	6.33	83.728	3.819	-6.25	-84.800	8.1	8.0	2.0 D	7.0 In
8.50	8.60	61.628	5.299	-6.25	-84.800	10.0	6.0	2.0 D	7.0 In

Base Curve	Clear
2.00	+1.50 to +3.00
4.00	+1.50 to +3.00
6.25	+1.50 to +3.00
8.50	+1.50 to +3.00

*Utilized for power calculation only, not for thickness calculation.

Click Here for Technical Tips

VISION-EASE LENS
WORLDWIDE

PRODUCT REFERENCE GUIDE

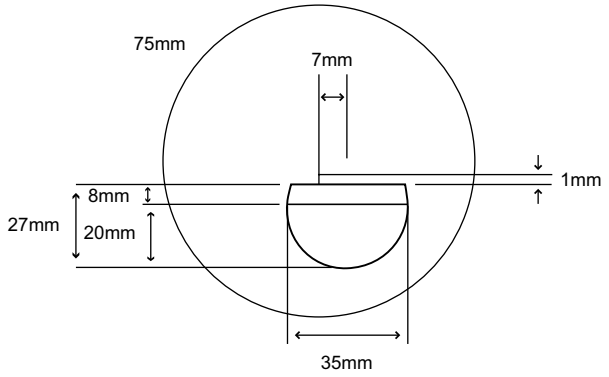

Polycarbonate

Continua® Trifocal

75mm Spherical 8x35 Trifocal

Base Curve	True Curve (1.530)	Front Radius	50mm SAG*	Back Curve	Back Radius	CT (mm) Nominal	ET (mm) Nominal	Drop	Inset
2.00	2.03	261.084	1.200	-6.25	-84.800	8.0	14.1	1.0 D	7.0 In
4.00	4.07	130.221	2.422	-6.25	-84.800	8.8	12.0	1.0 D	7.0 In
6.25	6.33	83.728	3.819	-6.25	-84.800	8.1	8.0	1.0 D	7.0 In
8.50	8.60	61.628	5.299	-6.25	-84.800	10.0	6.0	1.0 D	7.0 In

Base Curve	Clear
2.00	+1.50 to +3.00
4.00	+1.50 to +3.00
6.25	+1.50 to +3.00
8.50	+1.50 to +3.00

*Utilized for power calculation only, not for thickness calculation.

Base Curve Selection

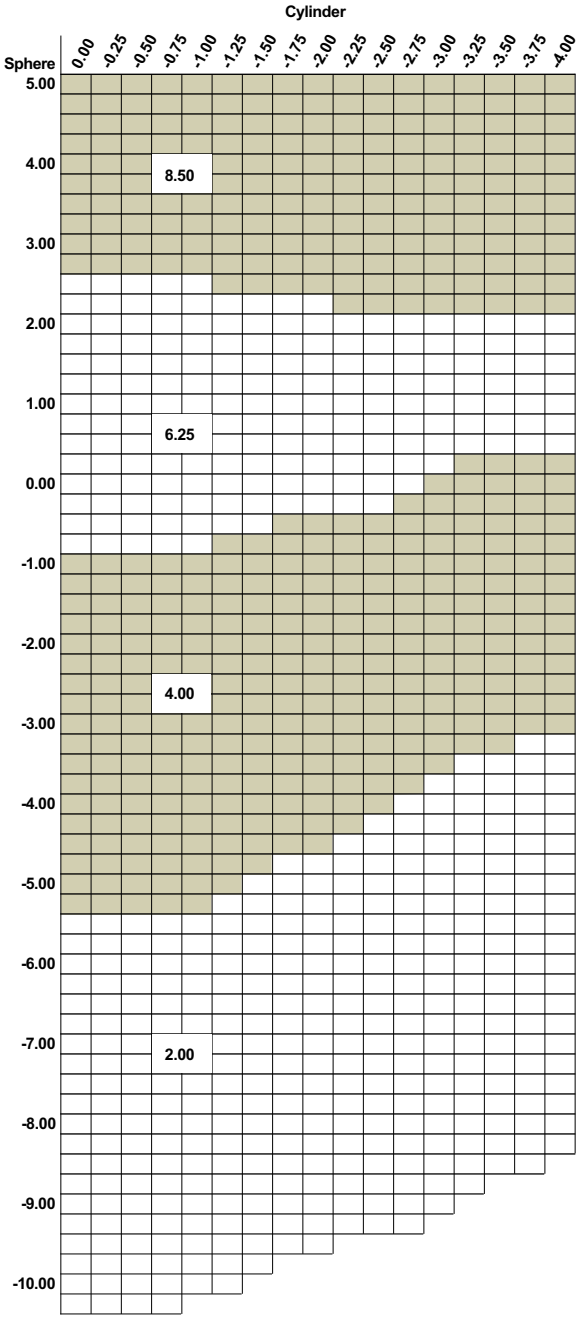

Click Here for Technical Tips